Sensor-switched LED floodlight

XLED home 2 S

white
EAN 4007841 033088
Article number 033088

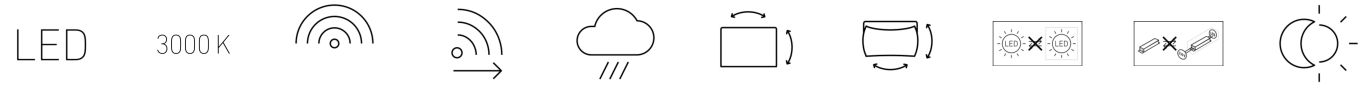

30 years (Ø 4,5h / day) | 3000K warm-white | infrared sensor 180° | max. 10 m | IP44 | 180° horizontal, 180° vertikal | 180° horizontal, 90° vertical | Light source not exchangeable | Control gear not exchangeable | 2 - 2000 lux

Function description

Top seller. Now even better. XLED home 2 S sensor-switched outdoor floodlight for even more safety and security. Fully swivelling LED panel in classy stainless-steel look. For the most exacting of demands on design and maximum lighting convenience. 1550 lm lm at a power consumption of only 13,7 W. Swivelling precision IR sensor (horizontally: 180°, vertically: 90°). 180° angle of coverage, 10 m reach, 3000 K. High thermal conductivity magnesium composite cooling system (HCMC).

Technical specifications

Dimensions (L x W x H)	161 x 180 x 218 mm
With lamp	Yes, STEINEL LED system
With motion detector	Yes
Manufacturer's Warranty	5 years
Settings via	Potentiometers
Version	white
PU1, EAN	4007841033088
Application, place	Outdoors
Application, room	outdoors, all round the building, terrace / balcony, courtyard & driveway
Colour	white
Includes corner wall mount	No
Installation site	wall, corner
Installation	Surface wiring, corner, Wall
Impact resistance	IK03
IP-rating	IP44

Mechanical scalability	No
Reach, radial	r = 5 m (39 m^2)
Reach, tangential	r = 10 m (157 m^2)
Photo-cell controller	Yes
Luminous flux total product	1550 lm
Total product efficiency	113 lm/W
Colour temperature	3000 K
Colour variation LED	SDCM3
Lamp	LED cannot be replaced
LED life expectancy (max. °C)	50000 h
Service life LED L70B50 (25°)	> 60000 h
Drop in luminous flux in accordance with LM80	L70B10
LED cooling system	HCMC (High Conductive Magnesium Composite)
Soft light start	No
Time setting	8 s – 35 Min.

Sensor-switched LED floodlight

XLED home 2 S

white
EAN 4007841 033088
Article number 033088

Technical specifications

Protection class	II
Ambient temperature	-20 – 40 °C
Housing material	HCMC
Cover material	Plastic, opal
Mains power supply	220 – 240 V / 50 – 60 Hz
Mounting height max.	4,00 m
Sneak-by guard	Yes
Capability of masking out individual segments	Yes
Electronic scalability	No

Basic light level function	No
Main light adjustable	No
Twilight setting TEACH	No
Interconnection	No
Output	13,7 W
Colour Rendering Index CRI	= 82
Optimum mounting height	2 m
Detection angle	180 °

Accessories

EAN 4007841 055615	Corner wall mount XLED home 2/ PRO 240

Sensor-switched LED floodlight

XLED home 2 S

white
EAN 4007841 033088
Article number 033088

Detection Zone

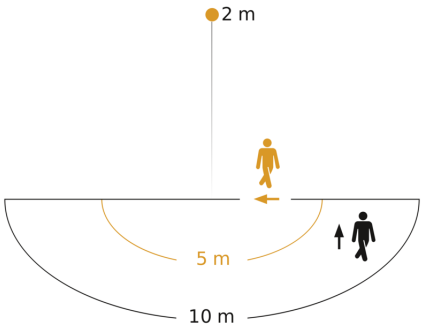

Possible mounting height: 1,80 m – 4,00 m
Orange: radial
Black: tangential

Dimension Drawing

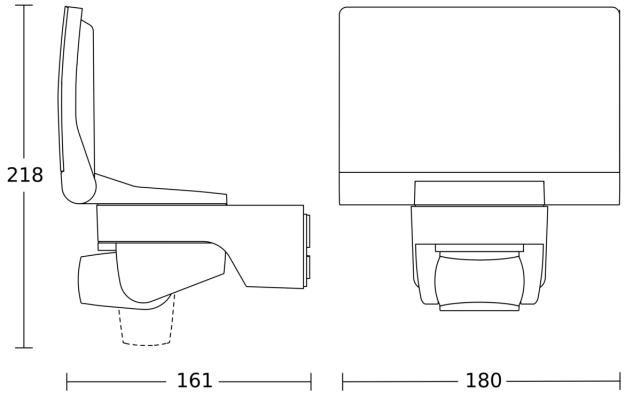

Light Distribution Curve

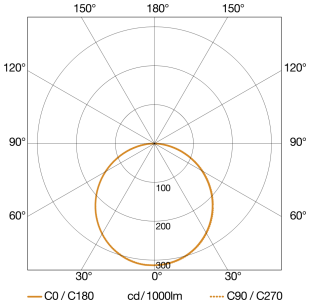

Output	13,7 W
With lamp	Yes, STEINEL LED system
Lamp	LED cannot be replaced
Colour temperature	3000 K
Colour Rendering Index	80-89
LED life expectancy (max. °C)	50000 h
LED cooling system	HCMC (High Conductive Magnesium Composite)
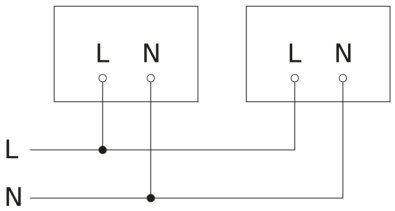
Circuit diagram